Feature :

- Encoder Operation Mode: 15 position output
- VR Operation Mode: 15 position output
- One key output other than the scroller output
- Bi-color LED illuminated available

Application :

- Audio / video equipments
- Consumer products
- Computer products
- Communication equipments
- Home appliances

SWITCH SPECIFICATIONS	
POLE - POSITION	Two-Channel
CIRCUIT FEATURE	Capacitive PWM signal
OPERATING TEMPERATURE RANGE	-20°C ~ 70°C

ELECTRICAL CHARACTERISTICS

Symbol	Parameter	Test Conditions		MIN.	TYP.	MAX.	Units
		V_{DD}	Conditions				
V_{CC}	Input Voltage	–	–	0	–	28	V
V_{DD}	Operating Voltage	–	–	2.8	5.0	5.5	V
I_{DD}	Operating Voltage - No Load	3.3V	3.3V	–	2	3	mA
V_{OH}	Output High Voltage	3.3V	I_{OH} = - 4.0mA	2.1	–	–	V
V_{OL}	Output Low Voltage	3.3V	I_{OH} = 8.0mA	–	–	0.9	V
V_{IL}	Input ports	3.3V	–	–	200	–	Hz

LED SPECIFICATIONS

ATTENTION LEDs are Electrostatic Sensitive devices	Unit	Value / LED Color						
		Blue	Pure Green	Red	Yellow	Orange	Green	White
LUMINOUS INTENSITY@20mA Iv	mcd	150	1000	800	350	700	300	300-1500
Dominant Wavelength λD	nm	470	525	630	590	601	570	/
FORWARD VOLTAGE@20mA Vf	V	3.7	3.5	2	2.1	2.1	2.1	3.5

■ A single bin cannot be ordered, please contact us in advance if you need a particular bin sorting before placing your order to clarify the lead time, MOQ and pricing

HOW TO ORDER

TS006 – [ ] [ ] [ ] [ ] [ ] [ ] [ ] [ ] – W100

CABLE & CONNECTOR: W100

SLIDING OPERATION

A	15 POSITION (Encoder)
B	15 POSITION (VR) (std.)
C	15 POSITION Can Lock Slide (Encoder)
D	15 POSITION Can Lock Slide (VR)

ONE KEY OPERATION

D	DIRECT MODE (std.)
T	TOGGLE MODE
DM	DIRECT MODE WITH MOTOR
TM	TOGGLE MODE WITH MOTOR

CAP COLOR

K	BLACK
W	WHITE (std.)

ONE KEY LED COLOR

CHIP1 & CHIP2	
RB	RED & BLUE
X	WITHOUT

BLOCK 2 LED COLOR

B	BLUE
G	GREEN
R	RED
Y	YELLOW
X	WITHOUT

CAP SYMBOL

E0A	K3B	M4C	E1D	□

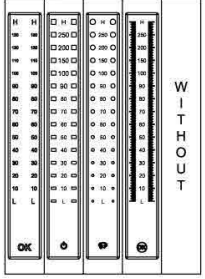

WITHOUT

BLOCK 1 LED COLOR

B	BLUE
G	GREEN
R	RED
Y	YELLOW
X	WITHOUT

BLOCK 3 LED COLOR

B	BLUE
G	GREEN
R	RED
Y	YELLOW
X	WITHOUT

DIMENSION

· TS0006-BTMKE1DRBYGB-W100

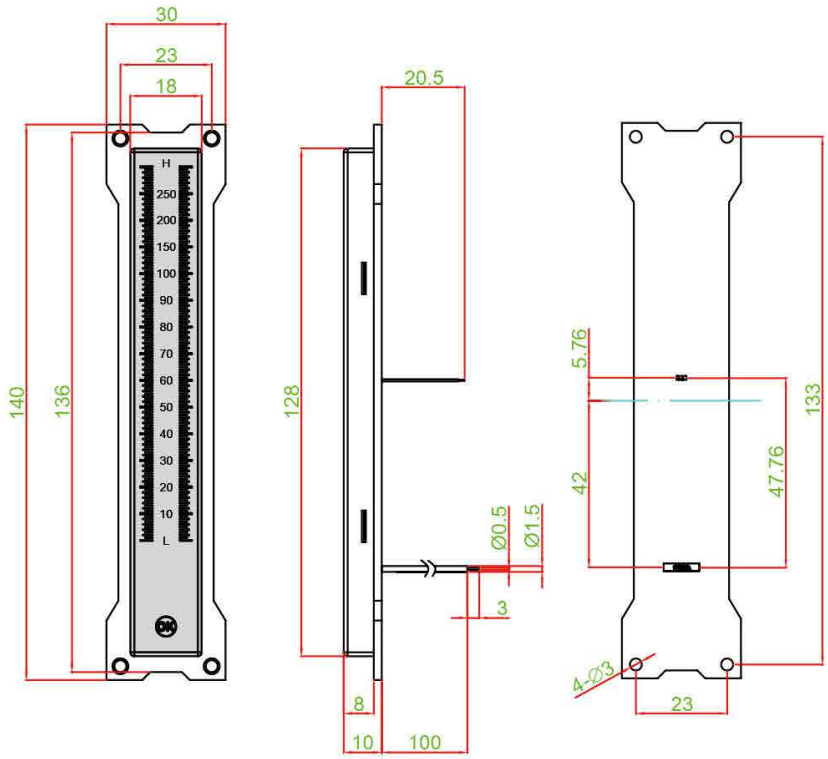

CIRCUIT

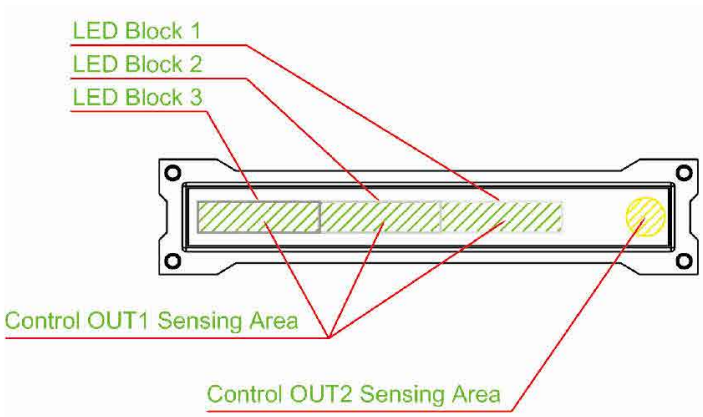

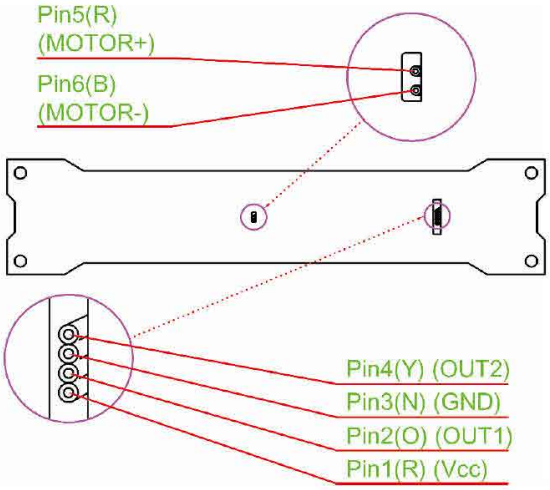
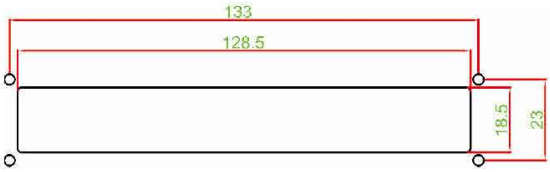
PANEL CUT OUT